SMITH® JAY R. SMITH MFG. CO.®
MEMBER OF MORRIS GROUP INTERNATIONAL
POST OFFICE BOX 3237
MONTGOMERY, ALABAMA 36109-0237 (USA)
TEL: 334-277-8520 FAX: 888-377-7818 www.jrsmith.com

CUSTOMER DRIVEN SINCE 1926

MEMBER OF:

LOCATION

NO-HUB INLET STACK FITTINGS

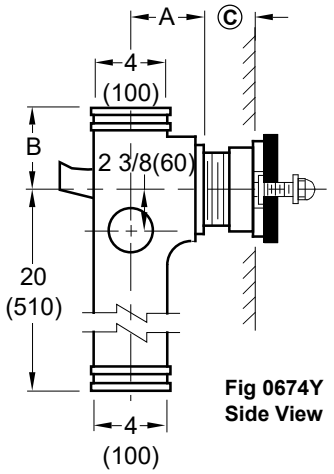

Fig 0674Y
Side View

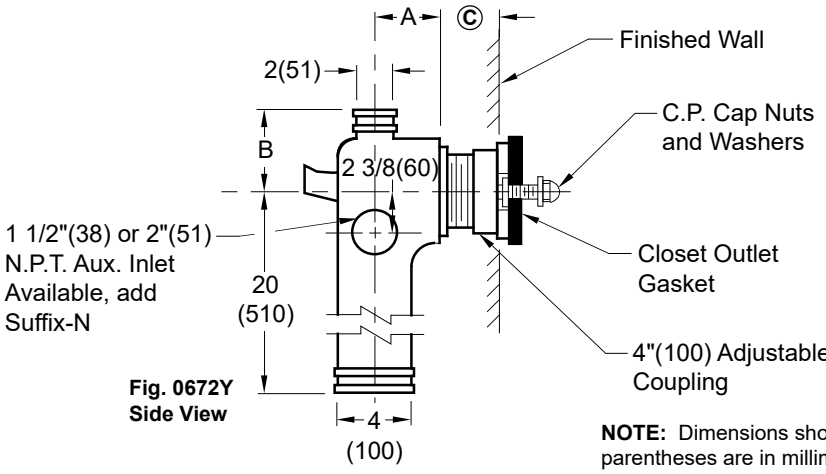

Fig. 0672Y
Side View

NOTE: Dimensions shown in parentheses are in millimeters.

☐ Fig. 0672Y . . . NO-HUB Long Barrel With 2"(51) Vent
☐ Fig. 0674Y . . . NO-HUB Long Barrel With 4"(100) Vent
☐ Less Rear Anchor Lug

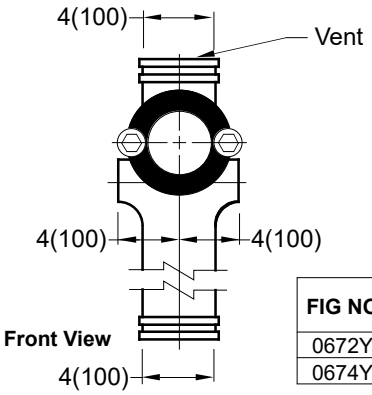

Front View

Conforms with ASME A112.6.1M

NOTE: When required a 2"(51) NO-HUB Aux. inlet adapter is available specify suffix-NY

FIG NO	A	B
0672Y	4(100)	7(180)
0674Y	4(100)	5(125)

The water closet gasket regularly furnished is designed to fit water closet outlet dimensions and configurations shown in ANSI Standard A112.19.2. If gasket is not found to be compatible to fixture due to nonconformance of said fixture to ANSI A112.19.2, then fixture manufacturer shall be consulted for a suitable gasket recommendation. Jay R. Smith assumes no liability for connections to fixtures which do not conform to these standards.

TYPICAL APPLICATION

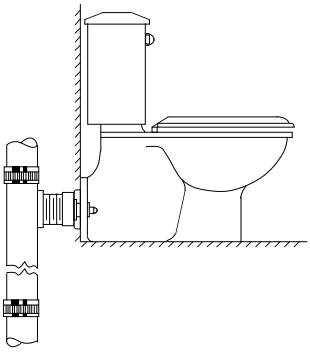

OUTLET CONNECTIONS

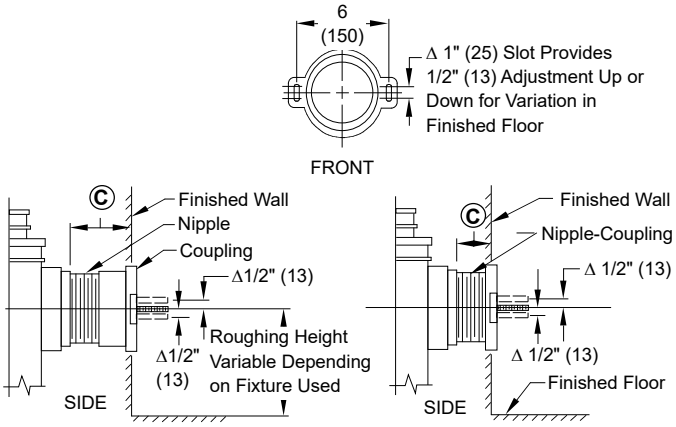

REGULARLY FURNISHED **TYPE 2M (When Specified)**

NIPPLE LENGTHS AVAILABLE

NIPPLE LENGTH	MIN	Ⓒ	MAX
2 1/2 (64)	2 3/4 (70)		3 3/4 (95)
* 3 1/4 (83)	3 (76)		4 1/2 (115)
4 1/2 (115)	4 1/4 (110)		5 3/4 (145)
5 1/4 (135)	5 (125)		6 1/2 (165)
6 1/4 (160)	6 (150)		7 1/2 (190)
7 (180)	6 3/4 (170)		8 1/4 (210)
8 1/4 (210)	8 (205)		9 1/2 (240)
10 (255)	9 3/4 (250)		11 1/4 (285)
12 (305)	11 3/4 (300)		13 1/4 (335)
15 (380)	14 3/4 (375)		16 1/4 (415)
18 (455)	17 3/4 (450)		19 1/4 (490)

* Regularly Furnished

REV.	DATE	DESCRIPTION	BY	CKD. BY
K	4-17-24	Added ASME Note	HS	JT
J	10-6-23	Removed Function	HS	CL
H	8-20-21	Added Rear Anchor Lug	KK	JM
G	5-13-13	Revised Text	TBW	CL

WEIGHT POUNDS

VOLUME CUBIC FEET

FIGURE NUMBER **0672Y, 0674Y**

K | DRAWING NUMBER S0672Y | SIZE A | SCALE: NONE | DATE: 8-21-72 | APPROVED BY: | CHECKED BY: RP | DRAWN BY: JH | 0672Y, 0674Y | FIGURE NUMBER

WE CAN ASSUME NO RESPONSIBILITY FOR USE OF SUPERSEDED OR VOID DATA
DIMENSIONS ARE SUBJECT TO MANUFACTURERS TOLERANCE AND CHANGE WITHOUT NOTICE

WARNING: Cancer and Reproductive Harm - www.P65Warnings.ca.gov